New Mexico State University
Klipsch School of ECE
EE 493/543 – Power Systems III
Fall 2009
Project Part - II
Due: Friday, 12/04/2009, 4 PM – will *not* be extended.

Name (print) :_____

ID # :_____

I have neither given nor accepted help on this test

Signature:_____

Parts	Maximum Points	Actual Score
1	10	
2	10	
3	10	
4	10	
5	20	
6	30	
7	10	
Total	**100**	

You may use MATLAB® or any other programming language of your choice. Any ready EMS software (like Powerworld®) is not permitted.

Note: You will submit your code for me to cross-check your answers. For grading, your answers will be cross-checked with the results from the code that you will submit. The code will consist of ONE file that needs to be run (other files for data input/output are permitted), and all the results should be displayed either on the MATLAB command window, or stored in a file in an organized manner. Any results that are not displayed properly with accompanying legend will NOT be considered for grading.

This is a take-home exam. NO interactions between students are permitted. Please follow the code of ethics very strictly. Any defaults will result in zero-grade and will be formally reported to the department.

Following are the one-line diagram (Fig. 1) and the data for the 6-bus, 115 kV, transmission system that you used in the first part of the project for the load flow study. Generators are now modeled for short-circuit study and are shown connected through transformers. Take a base of 115 kV_{L-L}, 100 $MVA_{3-phase}$ in the transmission zone. Assume the capacitors (rated 115 kV_{LL}) are ***connected*** to the system.

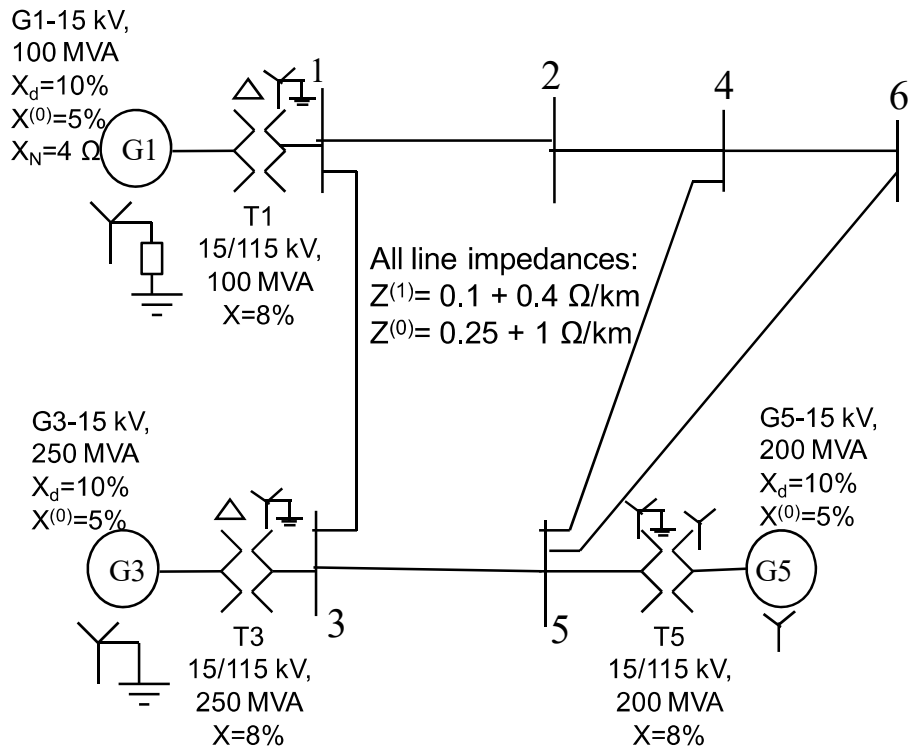

Fig. 1. Single-line diagram of the power system to be analyzed

Bus	Load (MVA)	Generation	Capacitors (MVAR)
1 (Slack)	50 + j80	Yes	
2	95 + j50	---	70
3	60 + j110	200 MW	
4	70 + j100	---	80
5	80 + j40	120 MW	
6	40 + j50	---	60

Line		Length (km)
From-Bus	To-Bus	
1	2	70
1	3	90
2	4	80
4	5	100
4	6	50
5	6	85
3	5	60

1) Draw below positive, negative and zero sequence networks of the system with all impedances/reactances shown in Per Unit values.

2) Show zero-sequence bus impedance and bus admittance matrices in ***polar coordinates*** below:

$Y_{BUS}^{(0)}$: Specify in polar form (pu):

$Z_{BUS}^{(0)}$: Specify in polar form (pu):

3) Show positive/negative-sequence bus impedance and bus admittance matrices in ***polar coordinates*** below:

$Y_{BUS}^{(1)} = Y_{BUS}^{(2)}$: Specify in polar form (pu):

$Z_{BUS}^{(1)} = Z_{BUS}^{(2)}$: Specify in polar form (pu):

Now consider there is a Single Line to Ground Fault with 4 Ω resistance at bus#4.

4) Find out the total fault current in Amperes and write it down below in ***polar*** form:

I_F = _____ Amperes.

5) Find out and show the voltages at all buses in ***polar*** form after the fault in ***Volts***. Do NOT neglect the pre-fault conditions. You can get the pre-fault voltages from the load-flow results given as the solution of part-I of this project.

	Bus 1 – (V)	Bus 2– (V)	Bus 3– (V)	Bus 4– (V)	Bus 5– (V)	Bus 6– (V)
Phase-A						
Phase-B						
Phase-C						

6) Find out the fault contributions from the three generators in Amperes and write it down below in ***polar*** form:

Generator		Current (Amperes) – HV side of Transformer	Current (Amperes) – LV side of Transformer
G1	Phase - A		
	Phase - B		
	Phase - C		
G3	Phase - A		
	Phase - B		
	Phase - C		
G5	Phase - A		
	Phase - B		
	Phase - C		

7) Find out the three-phase short circuit MVA at bus#3. From the list of breakers given in table 7.10 – page#378 in your text-book; is there any breaker that is suitable to be installed at this bus? If yes, which one? Justify your answers.

- Show your method/calculations and intermediate answers (if any) on separate sheets as appendix. I will not go through the calculations (and you will lose points) unless they are clearly written and well-organized. It is not my job to figure out what you are trying to say, it is your job to explain to me what you are trying to communicate. MATLAB command-window printout is NOT allowed.
- Send me a soft copy of your code for me to verify your results. Do NOT give me the hard copy of the code.